TREATTON FILTER CARTRIDGES

POLYPROPYLENE SEDIMENT FILTER

Code: 0103127

Polypropylene Sediment Filter 30-40 inch		
Product Code	Model	Rating
0103127	PP 01-30	1 um
0103128	PP 05-30	5 um
0103130	PP 05-40	5 um

Code: 0103184

Orange Surface Polypropylene Sediment Filter		
Product Code	Model	Rating
0103184	5 M 30" (Melt Blown)(Orange Surface)	5 um
0103186	5 M 40" (Melt Blown)(Orange Surface)	5 um

TREATTON FILTER CARTRIDGES

STRING WOUND FILTER

String Wound Filter	
Product Code	Model
0105040	String Wound 5M 30”
0105041	String Wound 5M 40”

FLOW METER

Flow Meter

Product Code	Model	Connectop	Range		Type
			GPM	LPM	
0704010	Z-3005	1" M	4-24	20-100	Kneading Board
0704011	Z-3006	1" M	5-35	30-130	
0704032	Z-4004	1" F	2-20	10-70	Inline
0704023	Z-4005	1" F	5-30	20-110	
0704012	Z-4006	1 1/2" M	20-60	80-220	
0704013	Z-4007	2" M	30-110	100-400	
0704014	Z-4008	2" M	50-150	190-560	
0704015	Z-4009	2" F	60-200	220-750	

PRESSURE GAUGE

Pressure Gauge	
Product Code	Model
0708027	0-80 PSI (Back)(Oil)
0708029	0-140 PSI (Back)(Oil)
0708035	0-150 PSI (Back)(Oil)
0708028	0-300 PSI (Back)(Oil)

FIBERGLASS REINFORCED PLASTIC TANK (FRP TANK)

Fiberglass Reinforced Plastic Tank (FRP Tank)					
Product Code	Model	Top Open	Bottom Open	Color	Max. Pressure
0903091	21"x62"	4"	-	Natural	150 PSI
0903092	24"x65"	4"	-		
0903093	30"x72"	4"	-		
0903094	32"x72"	4"	-		
0903095	24"x65"	4"	4"		
0903096	30"x72"	4"	4"		
0903097	32"x72"	4"	4"		

Material : Polyethylene inner liner / FRP with Epoxy Resin outer shell

Max Temperature : 122 °F (50 °C)

INDUSTRIAL / COMMERCIAL

RO 1m^3/hr
Product code : 1307035

RO 2m^3/hr
Product code : 1307036

RO 4-5m^3/hr
Product code : 1307057

STANDARD SPECIFICATION

Capacity (m^3/hr)		1m^3/hr	2m^3/hr	3-3.5m^3/hr	4-5m^3/hr	10m^3/hr
Prefilter	Housing	Big Blue 20"x2	Big Blue 20"x2	SS Cartridge 20"x2	SS Cartridge 5x20"	SS Cartridge 5x30"
	Filter	PP BB 20"x1	PP BB 20"x2	PP BB 20"x2	PP 20"x5	PP 30"x5
High Pressure Pump	Model	DOSAG VCP2-220	DOSAG VCP4-160	DOSAG VCP8-160	DOSAG VCP8-160	DOSAG VCP16-140
	Power	2.2 kW	3 kW	5.5 kW	5.5 kW	15 kW
	Volt	220V (or 380V)	380V	380V	380V	380V
RO Membrane		Ultratek 8040(E) x1	Ultratek 8040(E) x2	Ultratek 8040(E) x3	Ultratek 8040(E) x4	Ultratek 8040(E) x9
RO Vessel (FRP)		8040x1	8040x2	8040x3	8080x2	80120x3
Feed Solenoid Valve		1.5"	1.5"	2"	2"	2.5"
Flushing Solenoid Valve		1"	1"	1.5"	1.5"	2"
Pressure Gauge		0-80 psi x 1, 0-300 psi x 2	0-80 psi x 2 (Pre-filter), 0-300 psi x 2 (Inlet Membrane/Outlet Membrane)			
Flow Meter	Permeate	2-10 GPM	2-16 GPM	2-24 GPM	5-35 GPM	20-60 GPM
	Concentrate	2-16 GPM	2-16 GPM	5-35 GPM	4-24 GPM	20-60 GPM
	Return	-	2-10 GPM	5-35 GPM	2-16 GPM	5-30 GPM
Low Pressure Switch		DANFOSS KP-35				
High Pressure Switch		DANFOSS KP-36				
SUS Frame Structure Size (LxWxH)(cm)		180X80X130	200X90X130	200X90X130	250X100X130	-
Electrical Works		Relay				
Piping		UPVC & SUS 304				
Price						
Product Code		1307035	1307036	1307041	1307057	1307042
Optional		RO Vessel : SUS304				
		Electrical Works : PLC				
		TDS/Conductiv ity Meter				
		Anti-scalant Unit				
		CIP (Clening In Place) Unit				
		RO water Flushing (with CIP)				

VCP4

Performance curve

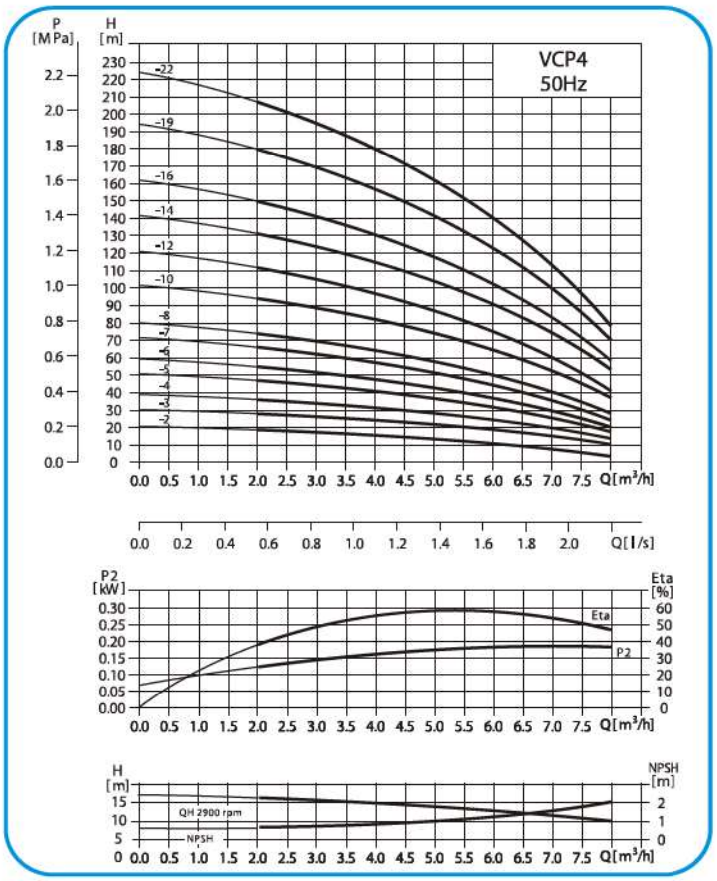

Installation sketch

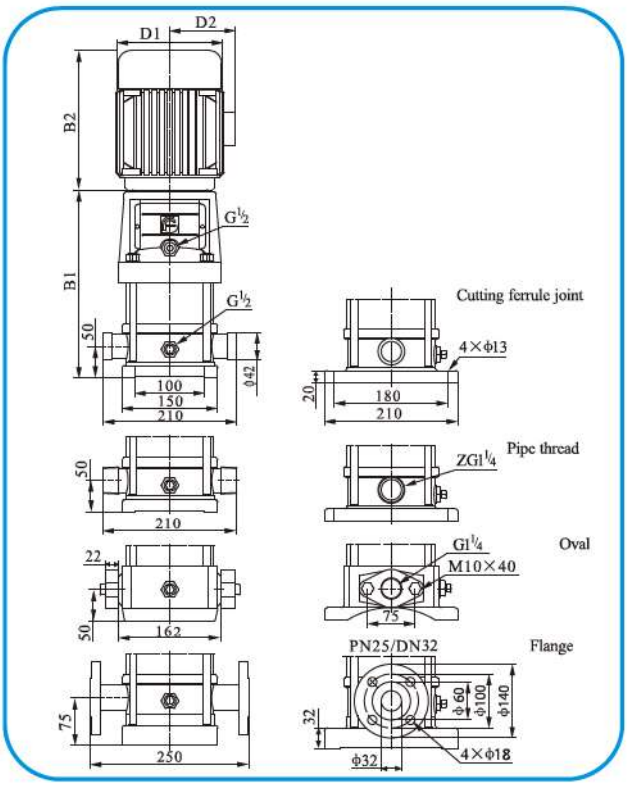

Performance table

Model	(kW)	Q (m^3/h)	1.5	2.0	3.0	4.0	5.0	6.0	7.0	8.0
VCP4-20	0.37	H (m)	19	18	17	15	13	10	8	6
VCP4-30	0.55		28	27	26	24	20	18	13	10
VCP4-40	0.75		38	36	34	32	27	24	19	13
VCP4-50	1.1		47	45	43	40	34	31	23	17
VCP4-60	1.1		56	54	52	48	41	37	28	20
VCP4-70	1.5		66	63	61	56	48	43	33	24
VCP4-80	1.5		74	72	70	64	55	50	38	27
VCP4-100	2.2		96	90	87	81	71	62	48	34
VCP4-120	2.2		114	108	104	95	85	75	58	41
VCP4-140	3.0		136	126	122	112	101	89	68	48
VCP4-160	3.0		152	144	140	129	115	101	78	55
VCP4-190	4.0		183	171	168	153	137	122	93	67
VCP4-220	4.0		211	200	192	178	160	138	108	79

Size and weight

Model	Size (mm)					Weight (kg)
	B1	B2	B1+B2	D1	D2	
VCP4-20	251	210	461	148	117	20
VCP4-30	278	210	488	148	117	20
VCP4-40	315	245	560	170	142	20
VCP4-50	342	245	587	170	142	25
VCP4-60	369	245	614	170	142	25
VCP4-70	406	290	696	190	155	30
VCP4-80	433	290	723	190	155	30
VCP4-100	487	290	777	190	155	30
VCP4-120	541	290	831	190	155	35
VCP4-140	605	315	920	197	165	35
VCP4-160	659	315	974	197	165	40
VCP4-190	740	335	1075	230	188	45
VCP4-220	821	335	1156	230	188	50

VCP8

Performance curve

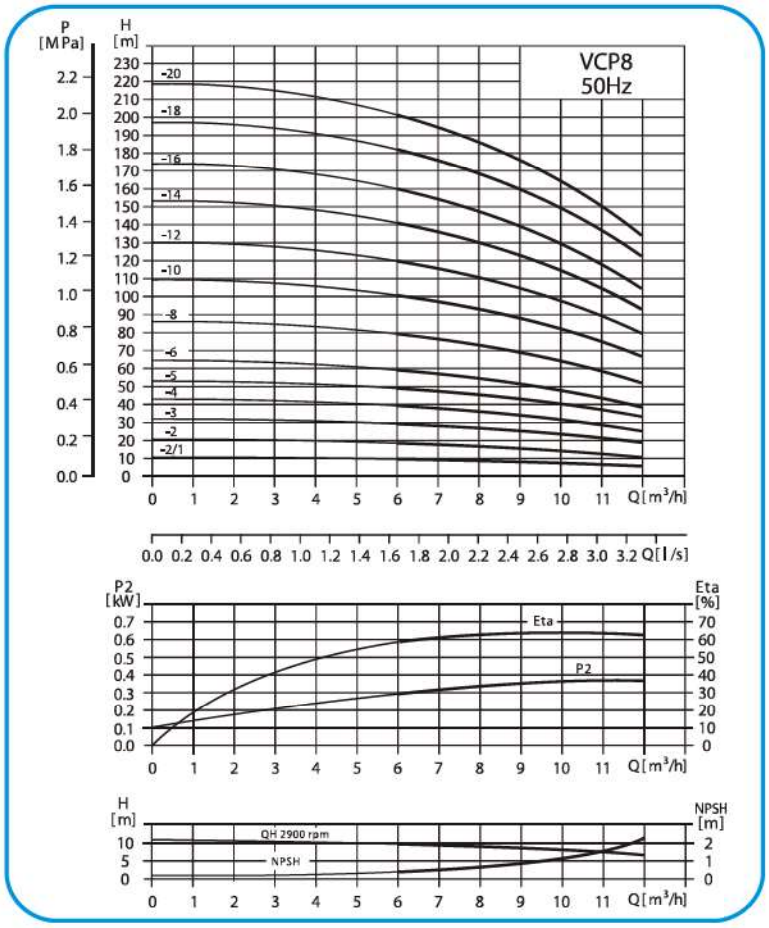

Installation Sketch

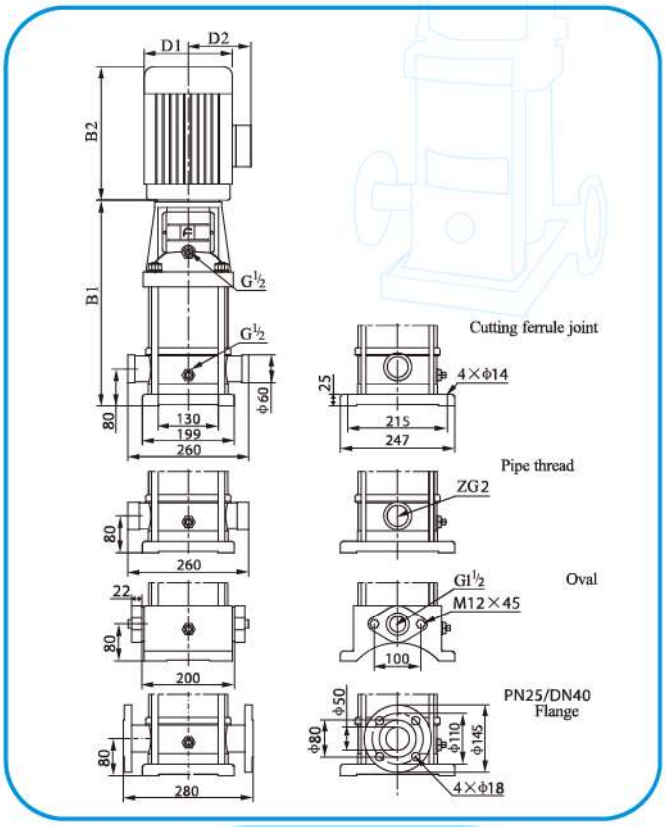

Performance table

Model	(kW)	Q (m³/h)	5	6	7	8	9	10	11	12
VCP8-20/1	0.75	H (m)	10	9.5	9.3	9	8.5	8	7	6
VCP8-20	0.75		20	19.5	19	18	17	16	14	13
VCP8-30	1.1		30	29.5	28.5	27	25	24	21	19
VCP8-40	1.5		41	39.5	38	36	34	32	28	26
VCP8-50	2.2		52	50	48	45	42	40	36	32
VCP8-60	2.2		62	60	57	54	51	48	43	39
VCP8-80	3.0		83	80	77	73	69	65	58	52
VCP8-100	4.0		104	100	97	92	87	81	73	65
VCP8-120	4.0		124	120	116	111	104	92	87	78
VCP8-140	5.5		145	141	136	130	122	113	102	92
VCP8-160	5.5		166	161	156	148	139	130	118	106
VCP8-180	7.5		187	182	175	167	157	146	134	120
VCP8-200	7.5		208	202	195	188	175	163	150	135

Size and weight

Model	Size (mm)					Weight (kg)
	B1	B2	B1+B2	D1	D2	
VCP8-20/1	347	245	592	170	142	22
VCP8-20	347	245	592	170	142	22
VCP8-30	377	245	622	170	142	32
VCP8-40	417	290	707	190	155	32
VCP8-50	447	290	737	190	155	42
VCP8-60	477	290	767	190	155	42
VCP8-80	547	315	862	197	165	47
VCP8-100	607	335	942	230	188	57
VCP8-120	667	335	1002	230	188	57
VCP8-140	747	430	1177	260	208	82
VCP8-160	807	430	1237	260	208	82
VCP8-180	867	430	1297	260	208	92
VCP8-200	927	430	1357	260	208	92

Performance curve

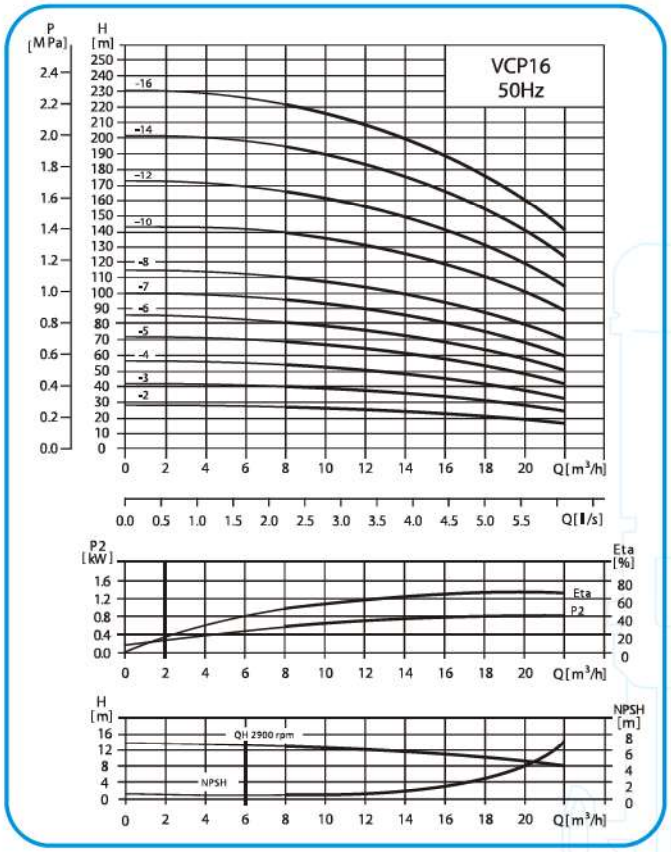

VCP16

Installation Sketch

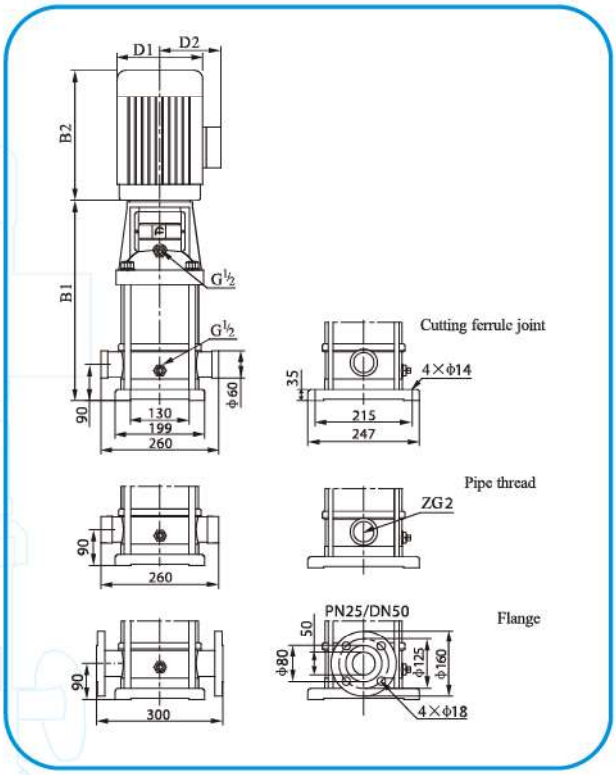

Performance table

Model	(kW)	Q (m^3/h)	8	10	12	14	16	18	20	22
VCP16-20	2.2	H (m)	27	26	25	24	22	21	19	16
VCP16-30	3.0		41	40	38	37	34	32	26	25
VCP16-40	4.0		54	53	52	49	46	43	38	34
VCP16-50	5.5		68	67	65	62	58	54	48	43
VCP16-60	5.5		82	80	78	74	70	64	58	52
VCP16-70	7.5		96	95	91	87	82	76	68	61
VCP16-80	7.5		110	108	104	99	94	86	77	70
VCP16-100	11		138	136	131	125	118	109	97	87
VCP16-120	11		166	162	157	150	141	130	116	105
VCP16-140	15		194	190	184	175	166	152	136	122
VCP16-160	15		222	217	210	200	189	174	156	140

Size and weight

Model	Size (mm)					Weight (kg)
	B1	B2	B1+B2	D1	D2	
VCP16-20	397	290	687	190	155	42
VCP16-30	452	315	767	197	165	52
VCP16-40	497	335	832	230	188	57
VCP16-50	562	430	992	260	208	72
VCP16-60	607	430	1037	260	208	77
VCP16-70	652	430	1082	260	208	82
VCP16-80	697	430	1127	260	208	82
VCP16-100	875	490	1365	330	255	142
VCP16-120	965	490	1455	330	255	147
VCP16-140	1055	490	1545	330	255	162
VCP16-160	1145	490	1635	330	255	167

Performance curve

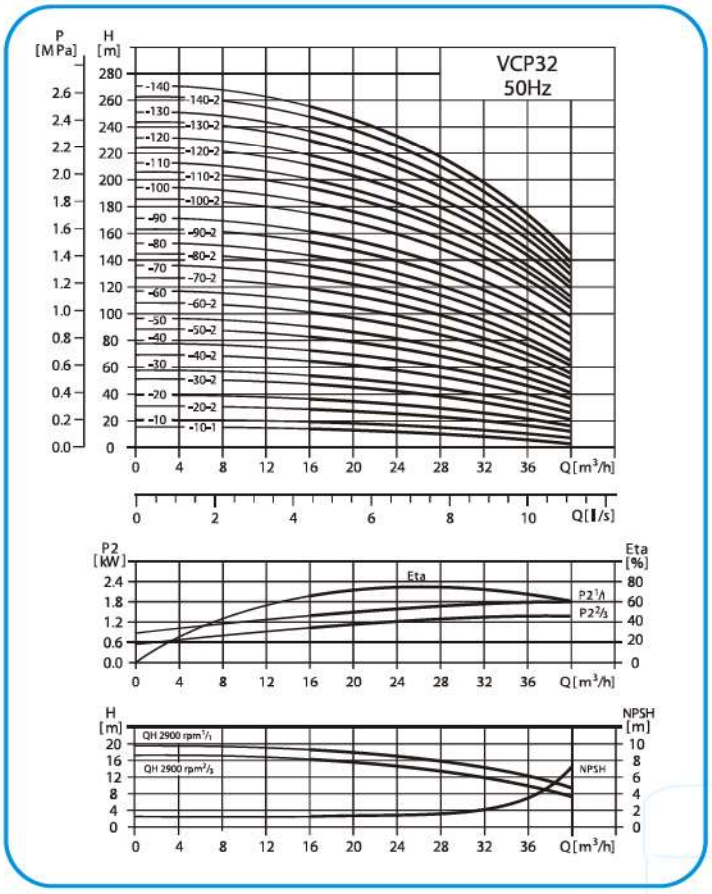

VCP32

Installation sketch

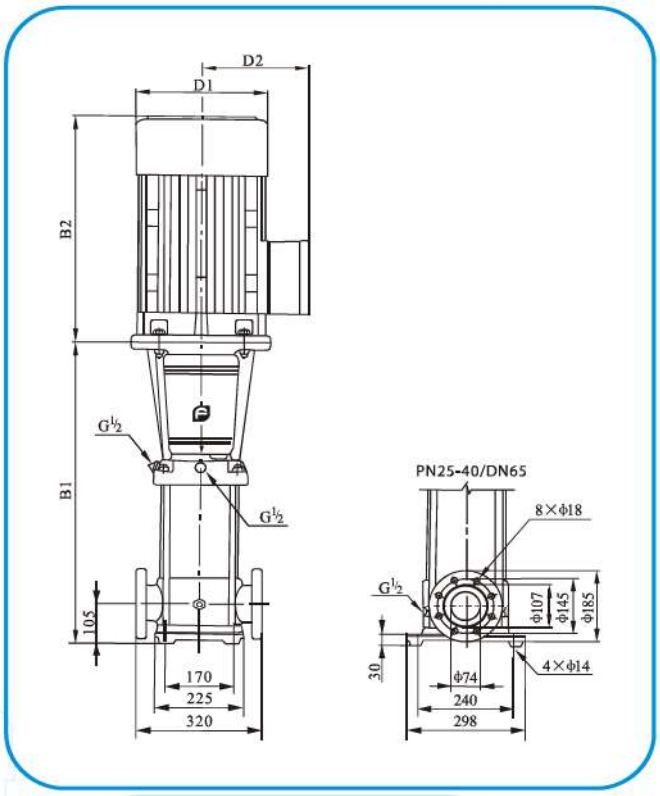

Performance table

Model	(kW)	Q (m^3/h)	16	20	24	28	32	36	40
VCP32-10-1	1.5	H (m)	14	13	12	11	9	7	4
VCP32-10	2.2		18	17	15	14	13	11	8
VCP32-20-2	3.0		29	28	26	23	20	16	11
VCP32-20	4.0		36	34	32	29	27	23	18
VCP32-30-2	5.5		47	44	41	38	33	28	21
VCP32-30	5.5		54	51	48	44	40	35	27
VCP32-40-2	7.5		65	62	58	53	46	40	30
VCP32-40	7.5		72	69	65	59	53	47	37
VCP32-50-2	11		83	79	74	68	60	52	41
VCP32-50	11		90	86	81	74	67	59	47
VCP32-60-2	11		101	97	90	83	74	65	51
VCP32-60	11		108	104	97	90	81	72	57
VCP32-70-2	15		119	114	107	98	88	78	60
VCP32-70	15		126	121	113	105	95	85	67
VCP32-80-2	15		136	131	123	114	102	90	71
VCP32-80	15		144	138	130	120	109	97	77
VCP32-90-2	18.5		154	148	140	129	117	102	82
VCP32-90	18.5		162	156	147	136	124	109	88
VCP32-100-2	18.5		175	166	157	146	131	115	91
VCP32-100	18.5		182	173	164	152	138	122	98
VCP32-110-2	22		193	184	173	164	146	128	102
VCP32-110	22		200	191	180	168	153	135	109
VCP32-120-2	22		211	201	189	178	160	140	113

Size and weight

Model	Size (mm)					Weight (kg)
	B1	B2	B1+B2	D1	D2	
VCP32-10-1/VCP32-10	505	290	795	190	155	68/71
VCP32-20-2/VCP32-20	575	315/335	890/910	197/230	165/180	78/84
VCP32-30-2/VCP32-30	645	430	1075	260	208	93
VCP32-40-2/VCP32-40	715	430	1145	260	208	102
VCP32-50-2/VCP32-50	890	490	1380	330	255	172
VCP32-60-2/VCP32-60	960	490	1450	330	255	176
VCP32-70-2/VCP32-70	1030	490	1520	330	255	188
VCP32-80-2/VCP32-80	1100	490	1590	330	255	192
VCP32-90-2/VCP32-90	1170	550	1720	330	255	218
VCP32-100-2/VCP32-100	1240	550	1790	330	255	222
VCP32-110-2/VCP32-110	1310	590	1900	360	285	259
VCP32-120-2/VCP32-120	1380	590	1970	360	285	263
VCP32-130-2/VCP32-130	1450	660	2110	400	310	327
VCP32-140-2/VCP32-140	1520	660	2180	400	310	331

Performance table

Model	(kW)	Q (m^3/h)	16	20	24	28	32	36	40
VCP32-120	22	H (m)	218	208	196	184	167	147	120
VCP32-130-2	30		230	218	206	193	174	153	124
VCP32-130	30		237	225	213	200	181	160	131
VCP32-140	30		247	235	222	210	189	165	135
VCP32-140-2	30		255	242	229	216	196	172	142

Fibertek

FIBERTEK®

Tank&Vessel

12-07-059

Corrosion Resistant

- ◊ Pressure vessels are made up of high performance composite material with filament winding.
- ◊ All pressure vessels are 100% corrosion resistant.
- ◊ Various thermoplastic liners of polyester, high strength polypropene, etc.
- ◊ Liner wall thickness available from 0.150"(3.8mm) up to 0.300"(7.6mm) corroesponding to the vessel diameter.

FiberTek Pressure Vessel Specs (Unit : mm)

size	Volumn		Top opening	Bottom opening	Base	A	B	C
	Gallon	Cubic foot						
21 x 62	82.4		4"- 8UN		Standard	1715	522	
			4"- 8UN	4"- 8UN	Tripod	2027	551	437
24 x 72	118.9		4"- 8UN		Standard	1901	600	
			4"- 8UN	4"- 8UN	Tripod	2154	605	401
30 x 72	187.1		4"- 8UN		Standard	1828	775	
			4"- 8UN	4"- 8UN	Tripod	2129	770	345
36 x 72	263.9		4"- 8UN		Standard		930	
			4"- 8UN	4"- 8UN	Tripod		932	

543
544
619
622
767
772
922
927

FIBERTEK® Tank & Vessel Specs (Unit : mm)

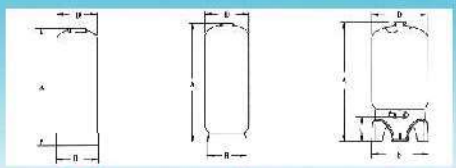

7"- 12" Standard Base | 13"- 36" Standard Base | 18"- 36" Tripod Base

Lowinstallation and maintenance

- ◊ The light weight of composites can lead to cost-savings like lower installation costs and easier handing.
- ◊ There's no need for painting, lining or epoxy coating inside the tank.
- ◊ It also facilitates the maintenance operations and leads to cast-efficiency.

Size & Features

- ◊ Full choice of pressure vessel availableup to 36" diameter with 72" height.
- ◊ Opening types are all top opening. Top & Bottom opening available for 18" through 36" tanks.

Test

250,000 times of cycle test from 10 PSI to 150 PSI with standing pressure.A gualification burst test to four times its rated operating pressure.

Tailored properties

- ◊ Reinforced Composites are only one-third the weight of steel tanks. Strengths are directly comparable to steel.
- ◊ All kinds of strict performance test show that composite vessels offer significantly better performance than lined steel.
- ◊ Physical properties :Operating Pressure 150 psi (10.3 kgf/cm²)
  Operating Temperature 120°F

Distributor...

MEMBER Water Quality ASSOCIATION No.1007184